User manual

Battery energy storage system

HHS-1X5K

HHS-1X10K

HHS-1X15K

HHS-1X20K

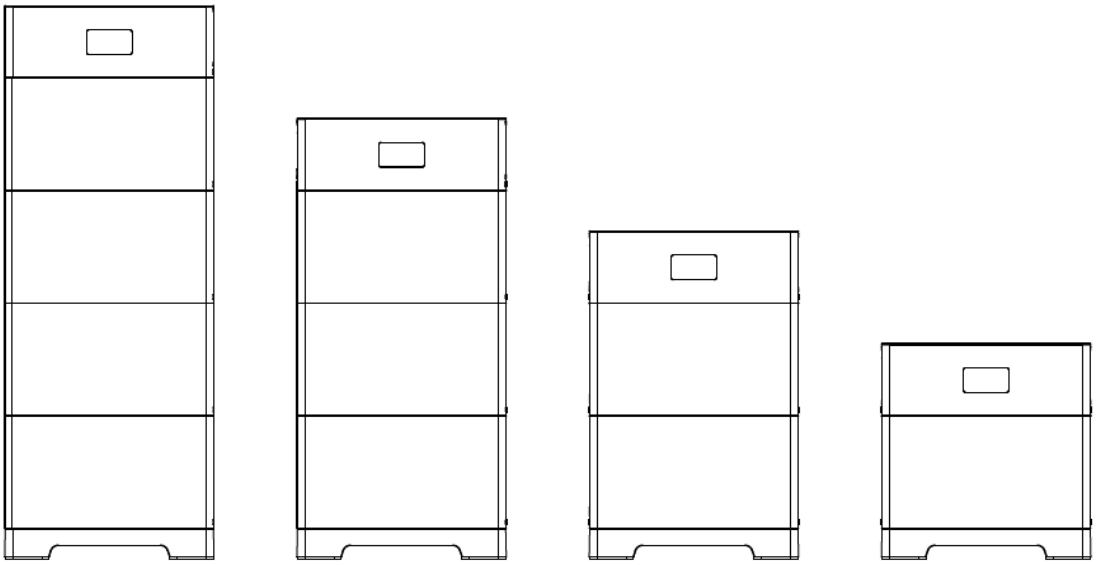

The picture is for reference only, subject to the actual object.

Different versions have slightly different appearance.

Version： V1.1

Content

1 Safety precaution....1
1.1 Storage and installation environment....1
1.2 Battery safety guidelines....1
1.3 Warning signs and stickers....1
1.4 Emergency handling....2
1.5 System lock function....2
2 Product description....3
2.1 Product introduction....3
2.2 Appearance description....4
3 Installation guide....6
3.1 Environmental requirements....6
3.2 Installation physical requirements....7
3.3 Installation....8
3.3.1 Installation tools....8
3.3.2 Packaging components....9
3.4 Installation steps....10
4 Electrical connections....19
4.1 Grounding instructions....19
4.2 Power connector installation....19
4.3 Cable connection....20
4.3.1 Single HHS-1X5K/10K/15K/20K system....20
4.3.2 Multiple HHS-1X5K/10K/15K/20K in parallel....21
5 Power up your system....23
5.1 System power up....23
5.2 System power off....23
5.3 Display description....24
5.4 System configuration....24
6 Maintenance and troubleshooting....28
6.1 Routine maintenance....28
6.2 Fault checklist....29
7 Warehouse storage guidelines....32
7.1 Packaging guidelines....32
7.2 Storage....33
8 Dispose of used batteries....33
9 Detailed specifications....34
10 RED Declaration of Conformity (DoC)....36

1 Safety precaution

Read the manual carefully and operate in accordance with the safety precautions. Refer to local safety regulations on items not covered in this manual. Electrical installation, maintenance must be performed by professional / qualified personnel.

1.1 Storage and installation environment

- Handle the product with care, avoid dropping
- Avoid open flames; keep away from flammables, explosives or corrosive chemicals
- Choose a cool and dry place for storage and installation
- Avoid water and humidity ingress
- Prevent accidental access from (children and animals)
- Do not step on the product when in its in it packaging
- Do not place any foreign objects on top of the battery pack.
- Do not store the battery pack upside down

1.2 Battery safety guidelines

- Prevent from electrostatic discharge
- Wear insulating gloves when handling batteries.
- Do not energize auxiliary power during installation
- Check the polarity carefully before switching on the system
- Defected or damaged batteries shall not be charged or discharged, contact service for further advice

1.3 Warning signs and stickers

	Warning Generic hazard		Do not mix with domestic
	Warning High Voltage - Electrical shock hazard		Please recycle
	No flame		This side up
	No stepping on		User manual
	Warning High temperature		Protective Earth (connector)
	Warning High Voltage Wait 5 min till fully discharged		Protective Earth (general identification)

	Do not short circuit (cut off power)		Keep away from children
	Fragile		Do not get wet

1.4 Emergency handling

Wear personal protective equipment (PPE) such as goggles, facemask, insulated gloves and boots. Evaluate the situation before taking remedy action. When it is safe to do so, disconnect external AC or DC power connection.

Damaged or deformed battery enclosures
Pose a risk of chemical leakage (i.e. electrolyte) and internal short-circuit.

Warning

Deformed or severely damaged battery pack can lead to piercing of cell pouch (chemical leakage) or internal short-circuit (thermal runaway). The damaged battery pack can release toxic gas. Keep away from it.
In case of accidental skin contact, wash the skin thoroughly with soap and seek medical advice. For eye contact, wash under running water (~15 minutes) and require immediate medical attention.

Fire hazard
If the fire is not from the battery or has not spread to the battery, use a FM-200 or CO2 fire extinguisher to put out the fire.
If the battery pack catches fire, do not attempt to put out the fire and evacuate immediately.
Seek medical advice in case of inhalation of pungent and toxic fumes.

Keep damaged batteries isolated and call your local fire department. Contact service for further support.

Water damage
Risk of electric shock and internal short-circuit. In case of splash or water spillage, when it is safe to do so, dry the product. If any part of the battery system is submerged, keep away from water.
Do not reuse the submerged battery. Contact a service for support.

1.5 System lock function

The battery system has a non-resettable function to stop operation when one or more cells in the battery system deviates form the operating region (voltage, current, temperature) during operation. This feature only allows for manufacturer reset.
The function of the battery system may be returned after checking that the status of the battery system complies with the battery system manufacturer manual.

2 Product description

HHS-1X(5/10/15/20)K is a plug-in energy storage system. The battery module can convert high voltage direct current (HVDC) into low voltage direct current (LVDC) through DC to DC conversion inside the battery and stores the power in batteries; it can also convert LVDC into HVDC and send the power to the grid through the inverter. This document provides product introduction, installation, commissioning, maintenance, troubleshooting, packaging and transportation information.

2.1 Product introduction

- Residential energy storage system with lithium iron phosphate (LFP) technology
- Modular design, single battery system with 5 to 20kWh (1 – 4 pcs battery)
- Single battery module is equipped with DC to DC conversion, which increases the output voltage to 350~450V
- Supports power expansion, and the single battery system with power 2.5 to 10kW
- Expandable to 60kWh (3*HHS-1X20K connected in parallel)
- Support the mixing of new and old batteries.
- Indoor or outdoor installation (IP65)
- PCS communication interface: CAN or RS485
- Bluetooth and WiFi for Mobile APP (PowerLite)
- Advanced battery management system (BMS) provides data acquisition, status monitoring and control to ensure the safe and reliable operation of the system.

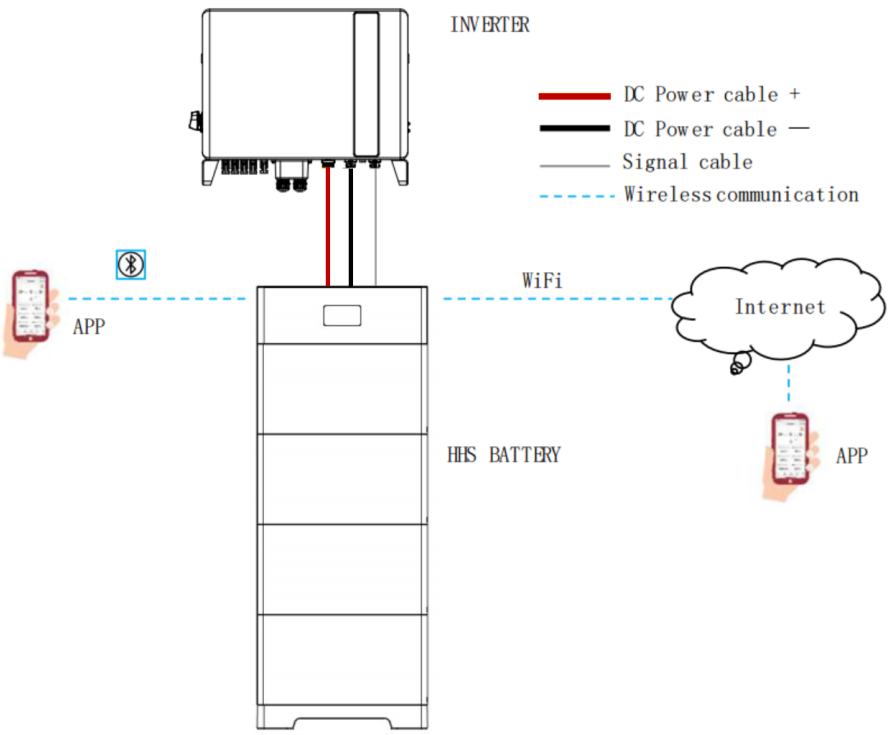

Figure 2-1-1 System topology

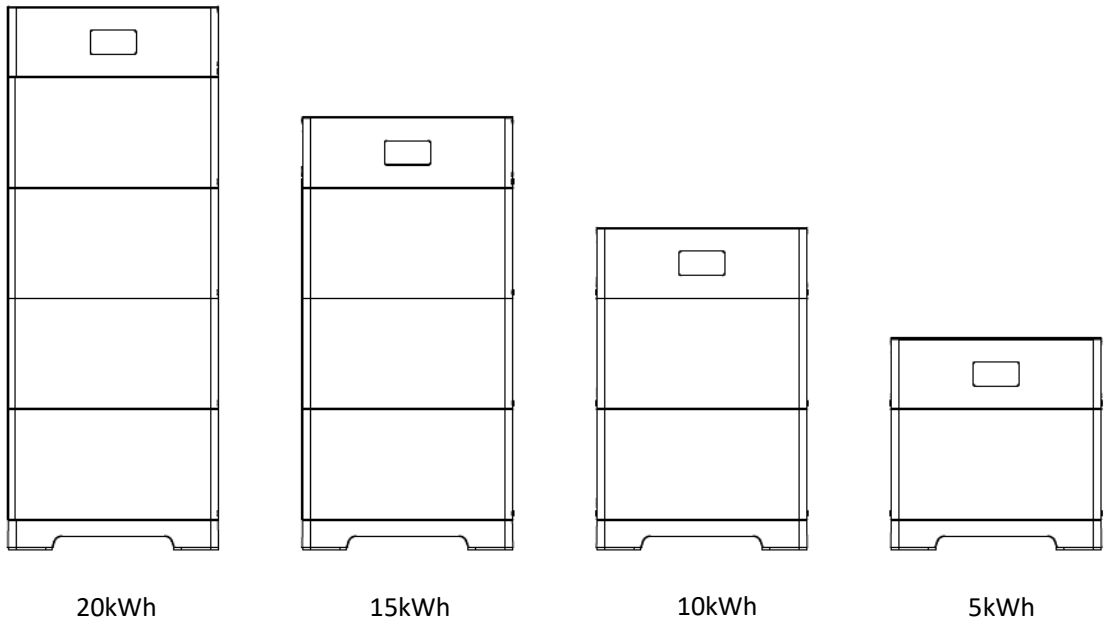

Figure 2-1-2 HHS-1X5K/10K/15K/20K configurations

2.2 Appearance description

- Appearance of the whole system

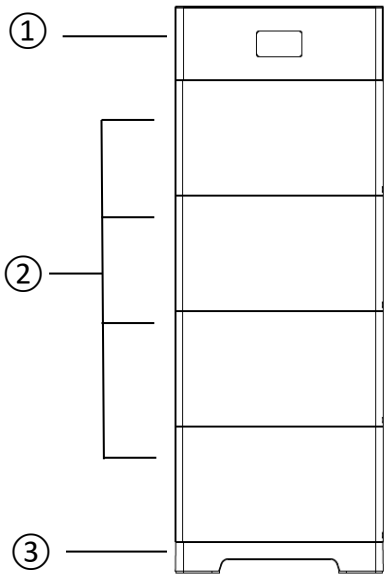

Figure 2-2-1 Appearance of the whole machine

① Control module ② Battery module ③ Mounting the base

- Control module

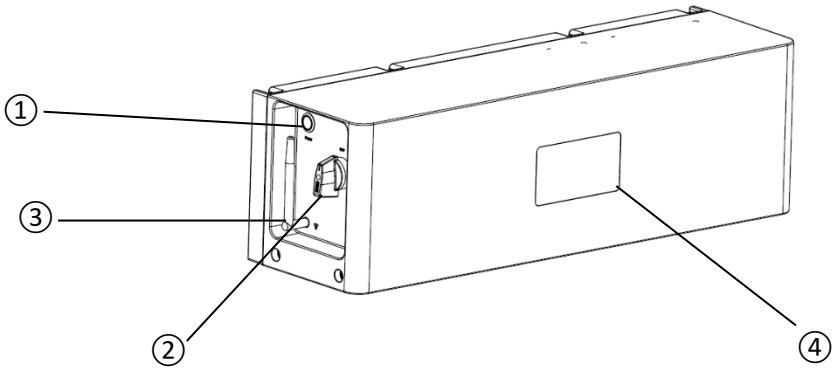

Figure 2-2-2 Left side of control module

①Power button ② DC breaker ③ Wi-Fi antenna ④ display

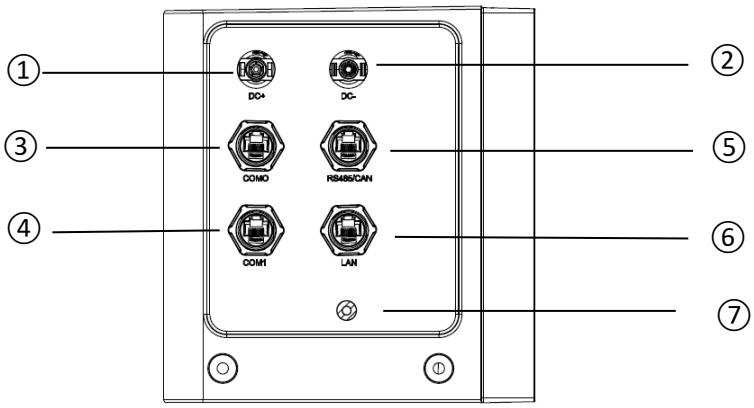

Figure 2-2-3 Right side of the control module

① Output Positive (DC+) ② Output Negative (DC-)

③ Parallel communication 0 (COM0) ④ Parallel communication 1 (COM1)

⑤ PCS communication (RS485/CAN) ⑥ Maintenance (LAN)

⑦ Protection earth (PE)

- Battery module

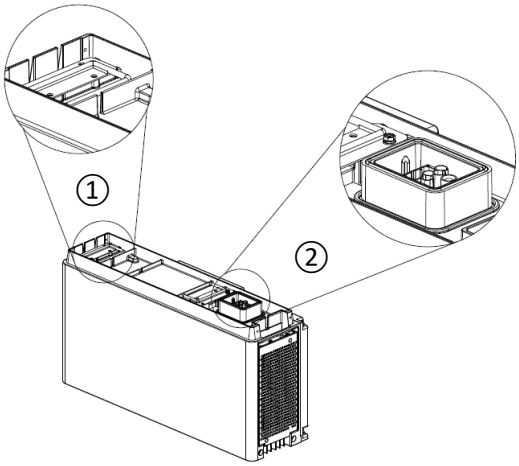

Figure 2-2-4 Structure diagram of battery module

① Handle ② Power/communication connector

3 Installation guide

3.1 Environmental requirements

a. Ambient temperature: -10℃~+50℃ (recommended: 10℃～35℃ or 50℉~95℉).

b. Ambient humidity: 10-95%.

c. Altitude < 4000m.

d. For outdoor installation

- Avoid direct sunlight
- Avoid rain and snow
- Avoid location susceptible to flooding
- Avoid areas were the battery is likely to be damaged from uncontrolled impacts (cars, motorcycles, ect...)

e. For indoor installation

- Local electrical standard and codes need to be followed when installing near doors, windows, driveway or other batteries
- Do not install near any heat sources
- Do not install in a area that contains corrosive chemicals
- Do not install in damp or wet areas
- Consider location equipped with ventilation fans, smoke, heat, or flammable gas detector

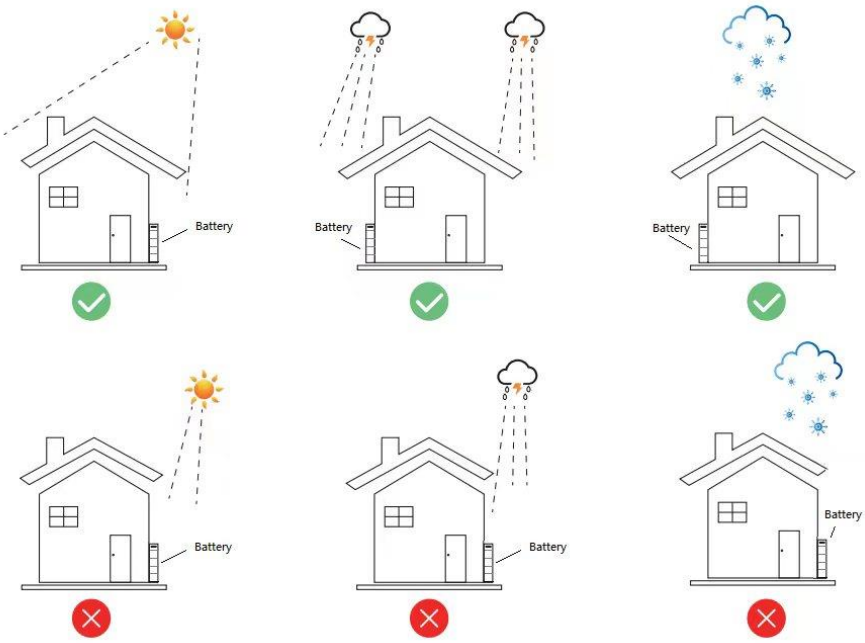

HHS-1X5K/10K/15K/20K performance degrades when ambient temperature is below 10℃(50℉) or above 40℃(104℉) degrees.

3.2 Installation physical requirements

a. Item inspection

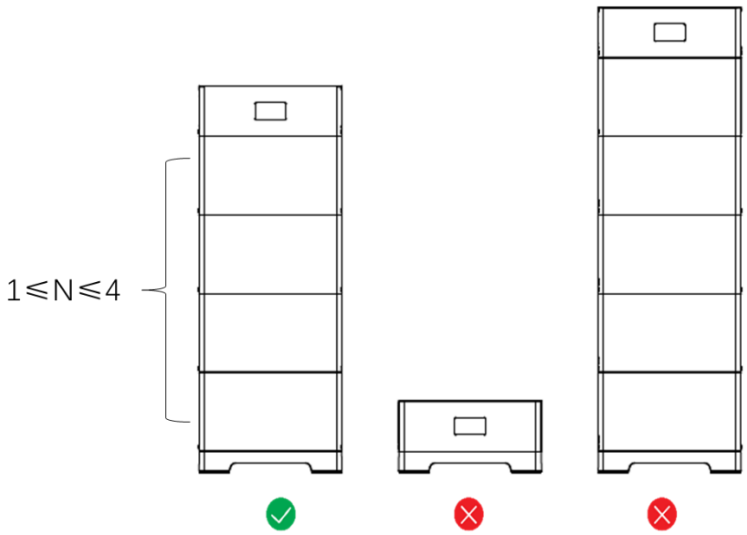

b. Installation clearance

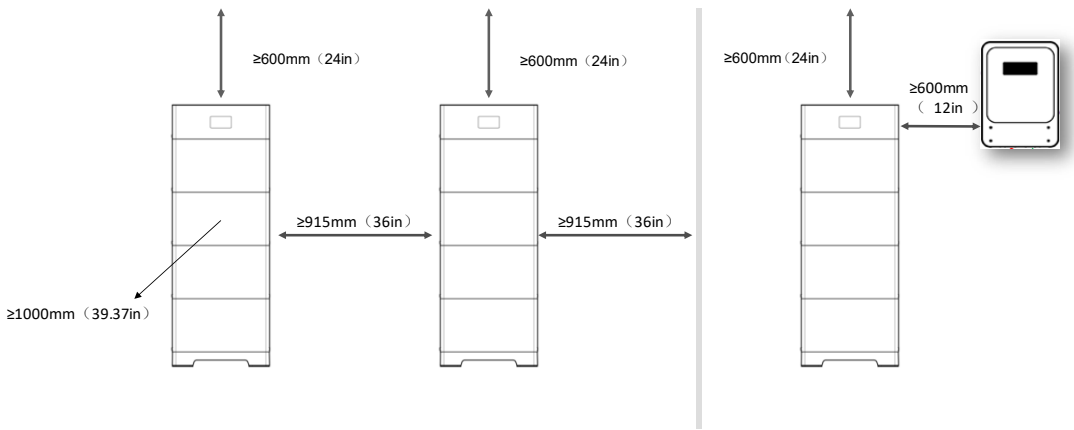

c. Level control

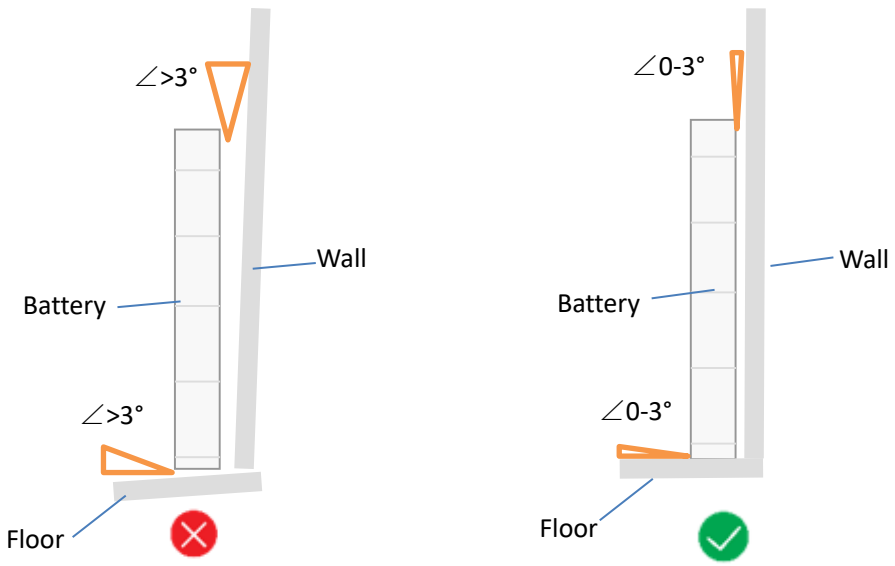

d. L-bracket fixing bolt positioning

Take into account the actual surface condition before fixing the L-bracket: the bolt spacing is 406mm

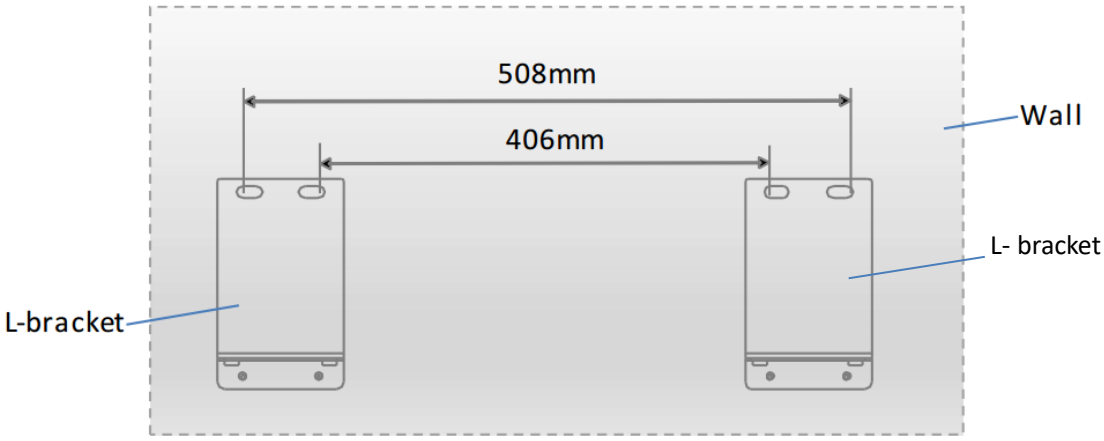

Avoid electricity wire, metal conduit or pipe inside the wall; consider using wall scanner (wall detector)

3.3 Installation

3.3.1 Installation tools

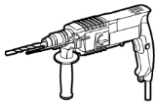 Impact drill (3/8 & 13/64 drill)	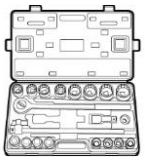 Torque wrench (7/16 & 9/16 hexagonal socket)	Marker pen	Electric batch
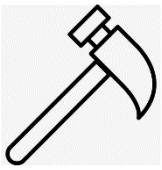 Hammer	Detector	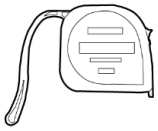 Steel tape	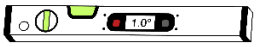 Level ruler

Personal Protective Equipment (PPE)			
Safety gloves	Safety goggles	Dust mask	Safety shoes

3.3.2 Packaging components

Battery Module Packaging Components		
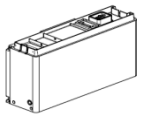 Battery module X1	 Screw cover X4	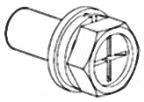 Fixing screws (M5*12) X4

Control Module Packaging Components			
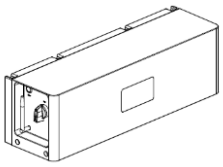 Control module X1	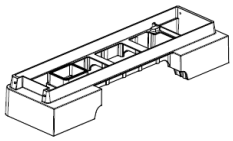 Base X1	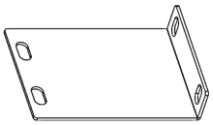 L-bracket X4 (max)	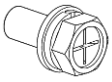 Fixing screws (M5*12) X12 (max)
 Expansion screw M8*80 X4 (max)	 Self-tapping screws M6*60 X4 (max)	 M6*18*2large flat pad X4 (max)	 Grounding Terminals X1
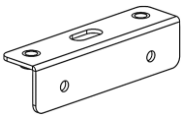 Angle bracket X4 (max)	 Screw cover X4	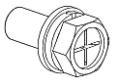 Fixing screws (M6*14) X8 (max)	 M8 flange nuts X4 (max)
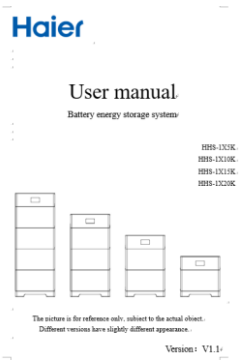 User manual X1			

Cable kit Packaging Components			
Positive wire harness X1	Negative wire harness X1	PCS-RS485/CAN communication cable X1	120ohm resistance

3.4 Installation steps

a. Place the base

Take the control module and base module out of the carton and put them side by side.

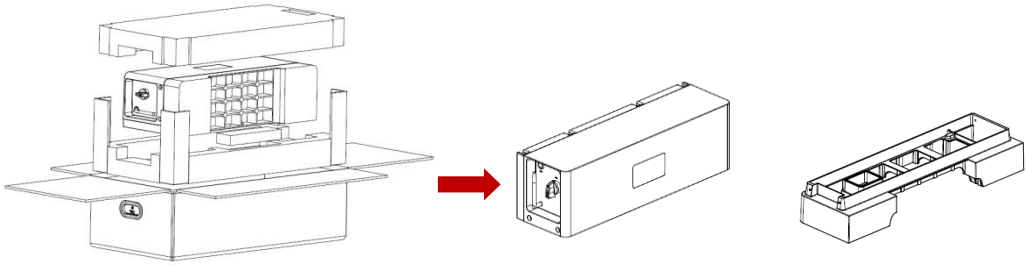

The base module should be placed on a level ground, parallel to the wall. The clearance to the wall should be 35mm (1.4inches).

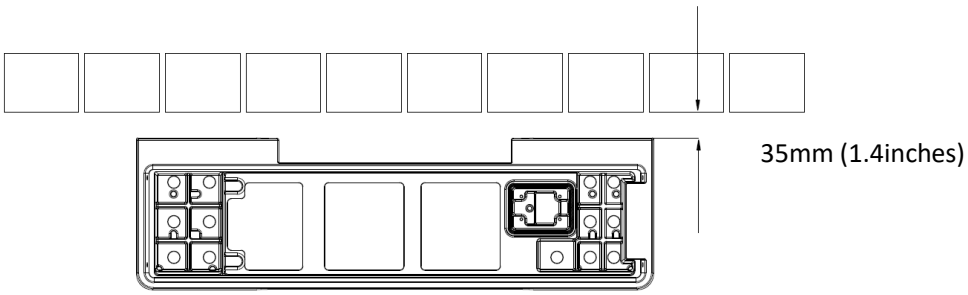

b. Install the angle bracket

Fixing screw	M5*12	4 pcs	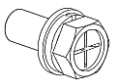
Angle bracket	-	2 pcs	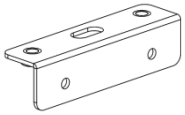

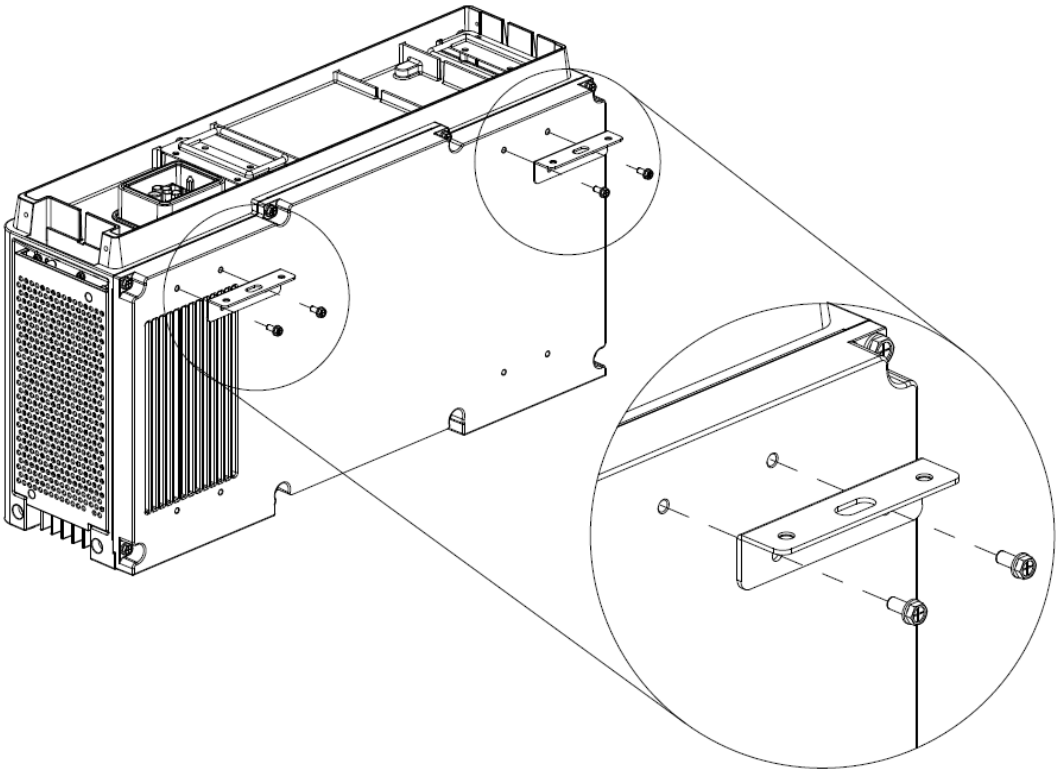

Refer to the following for the recommended the wall mounting assembly (angle bracket + L-bracket) installation:

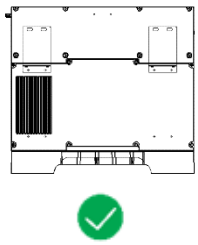	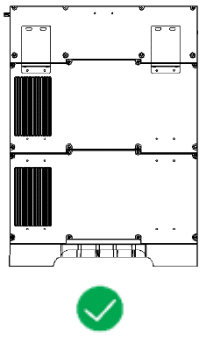	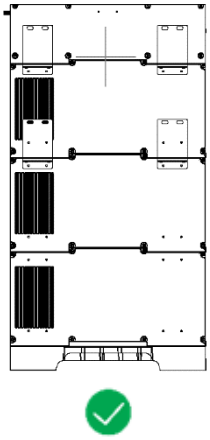	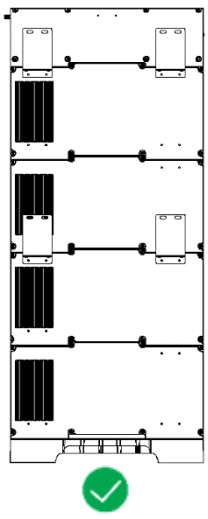
1 mounting assembly on **Batt. No.1**	1 mounting assembly on **Batt. No.2**	2 pcs mounting assembly on **Batt. No.2** **Batt. No.3**	2 pcs mounting assembly on **Batt. No.2** **Batt. No.4**

c. Stack battery module

Before stack battery module, please remove the waterproof cover and check that the terminal sealing ring is well fixed.

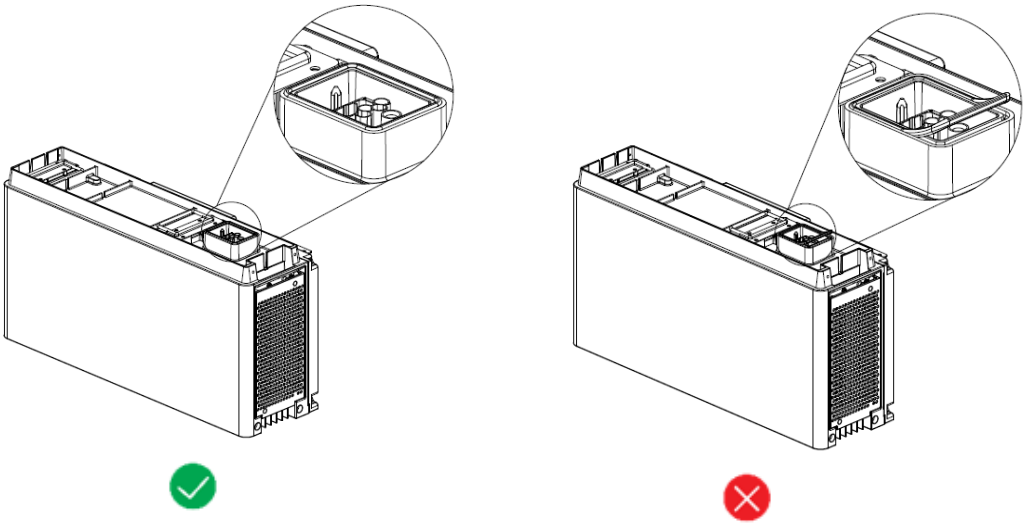

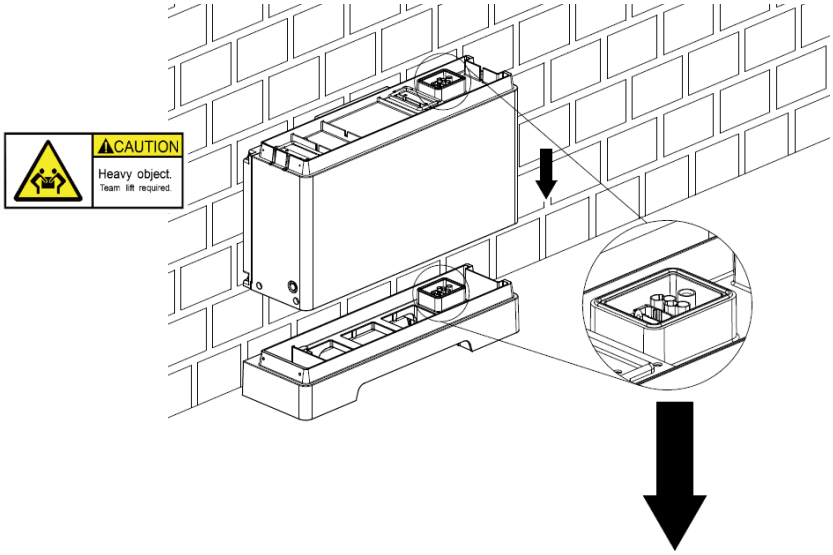

Unit weights 50kg (110.2lbs). Two or more people are necessary. Align the connector side first, then stack gently to avoid damaging the connector!

Fasten the installed battery module

Fixing screw	M5*12	4 pcs	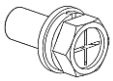
Screw cover	plastic	4 pcs	

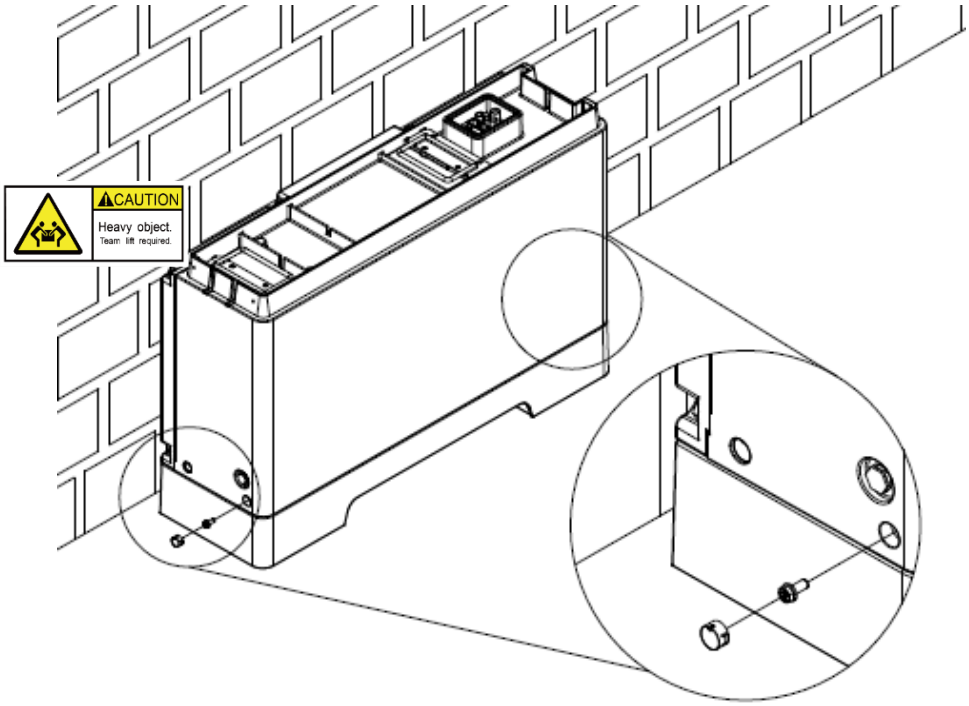

d. Adding additional battery module

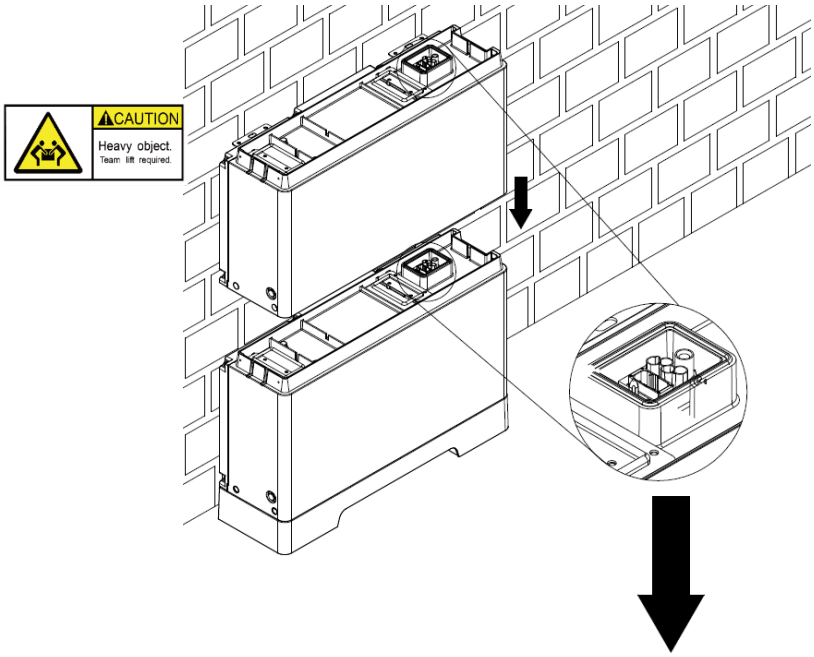

Fasten the stacked battery module

Fixing screw	M5*12	4 pcs	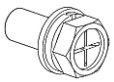
Screw cover	plastic	4 pcs	

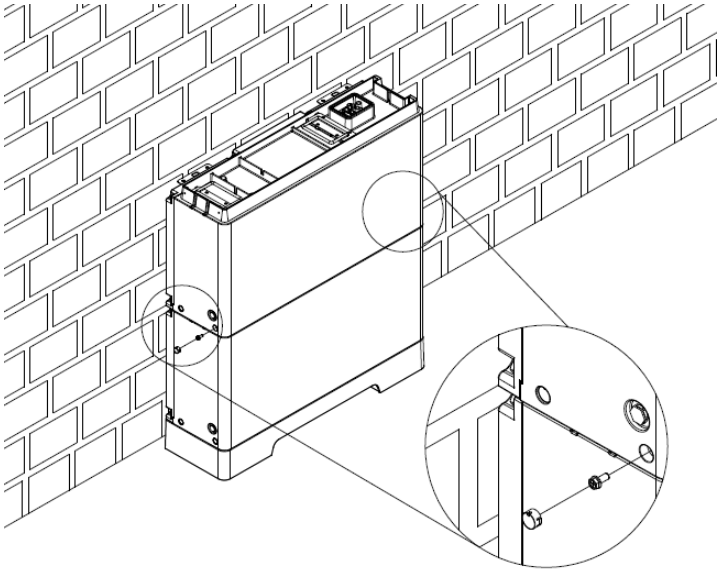

e. Install L-bracket

L-bracket	-	2 pcs	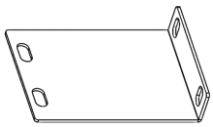

① Mark the screw position

Place the L-shaped bracket against the wall on the L-bracket and mark the drilling point

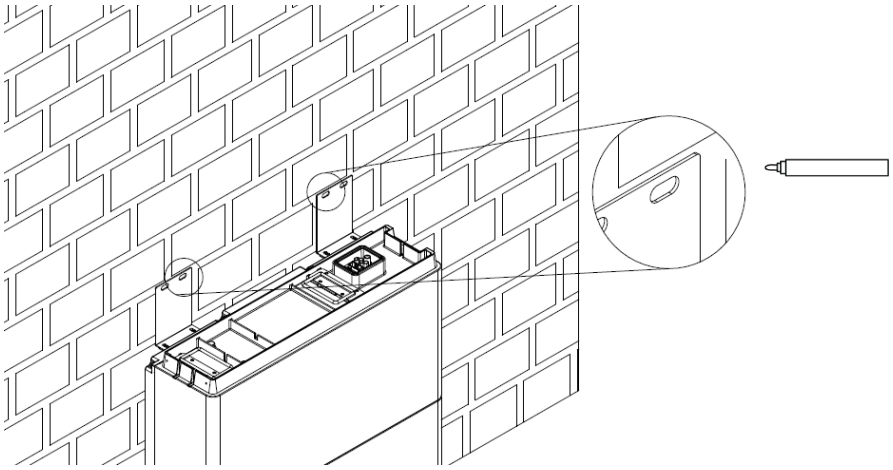

② Drilling (for concrete or brick wall) and fixing the L-Bracket to the wall

Use PE bag from the product packaging to prevent falling debris.

Case 1 for concrete wall or brick

Expansion screw	M8*80	2 pcs	
Flange nut	M8	2 pcs	

Case 2 for wooden wall

Self-tapping screws	M6*60	2 pcs	
Large flat pad	M6	2 pcs	

Note: The self-tapping screw must penetrate the stake 38mm.

1, Use M6*60 2pcs self-tapping screws to drill directly into the stake.

2, Use a 13/64 bit to pre-drill the holes if there are concrete wall partitions in front of the stakes.

Case 1	Case 2
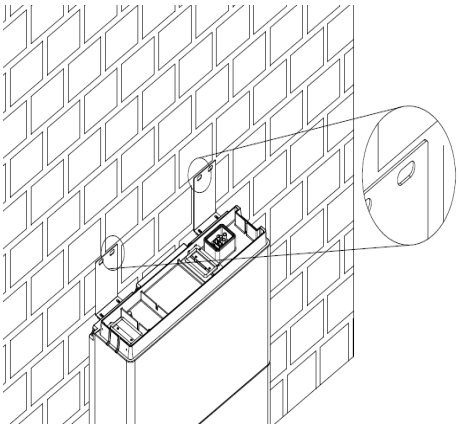	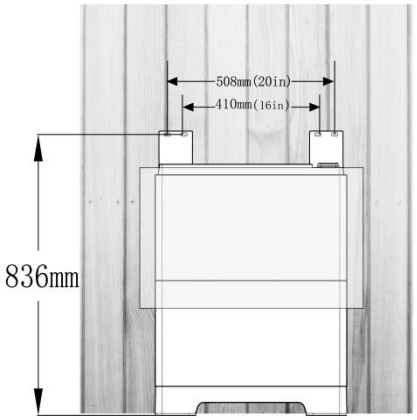

Make sure the connector is clean from debris.

③ L-shaped bracket assembly

Hex screw	M6*14	4 pcs	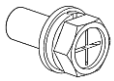

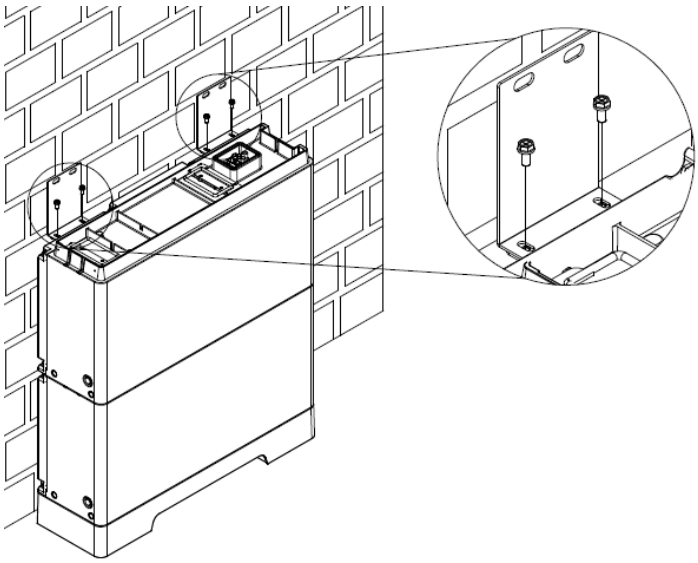

f. Stack additional battery modules (up to 4 battery modules in total)

Fasten the stacked battery module

Fixing screw	M5*12	8 pcs	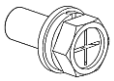
Screw cover	plastic	8 pcs	

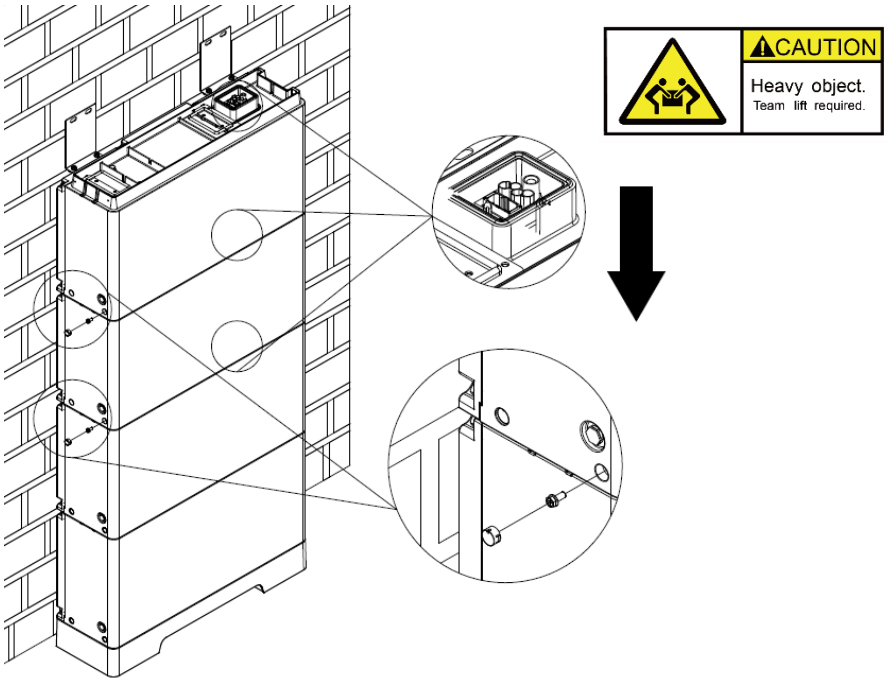

g. The overall bracket completes the installation position arrangement

HHS-1X5K		HHS-1X10K	
Concrete wall	Fire rated wall	Concrete wall	Fire rated wall
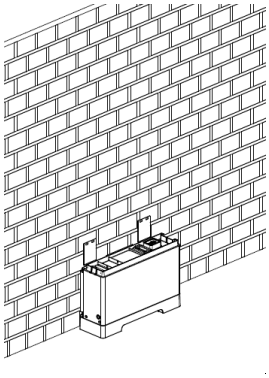	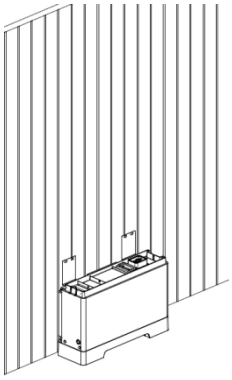	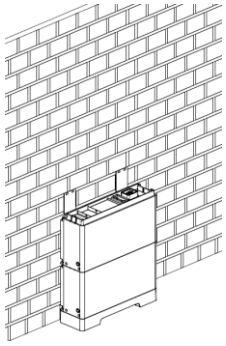	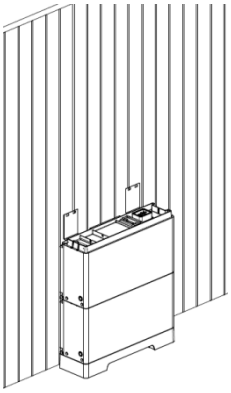

HHS-1X15K		HHS-1X20K	
Concrete wall	Fire rated wall	Concrete wall	Fire rated wall
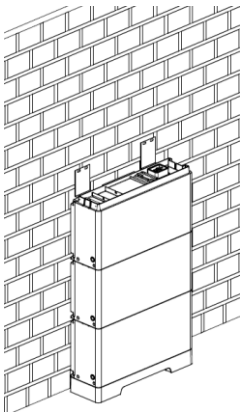	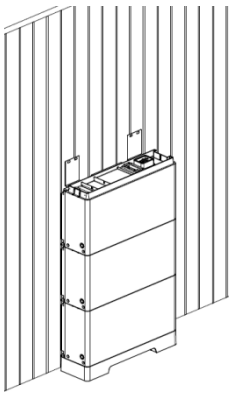	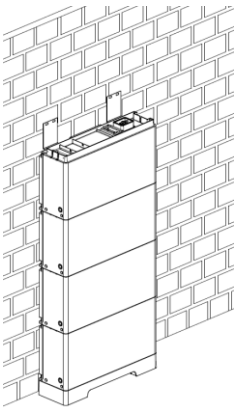	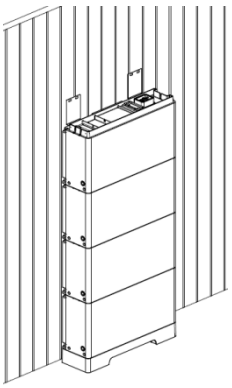

h. Control module installation

①Fasten the stacked battery module

Fixing screw	M5*12	4 pcs	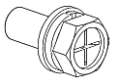
Screw cover	plastic	4 pcs	

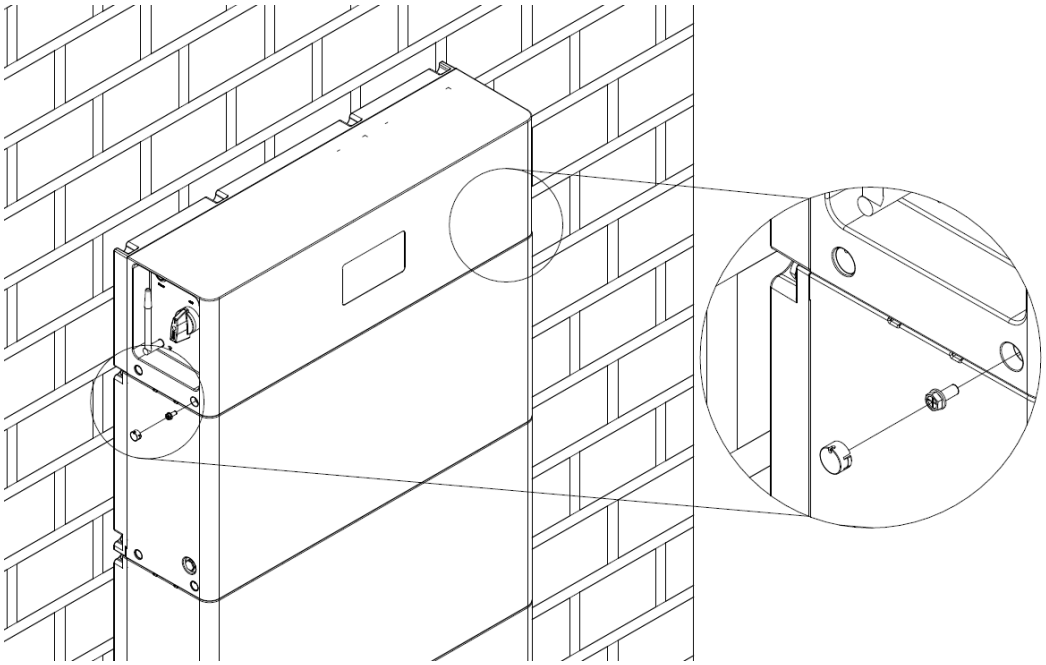

②Check model

Tick the nameplate model according to the number of installed battery modules:

5kWh：HHS-1X5K	10kWh：HHS-1X10K
15kWh：HHS-1X15K	20kWh：HHS-1X20K

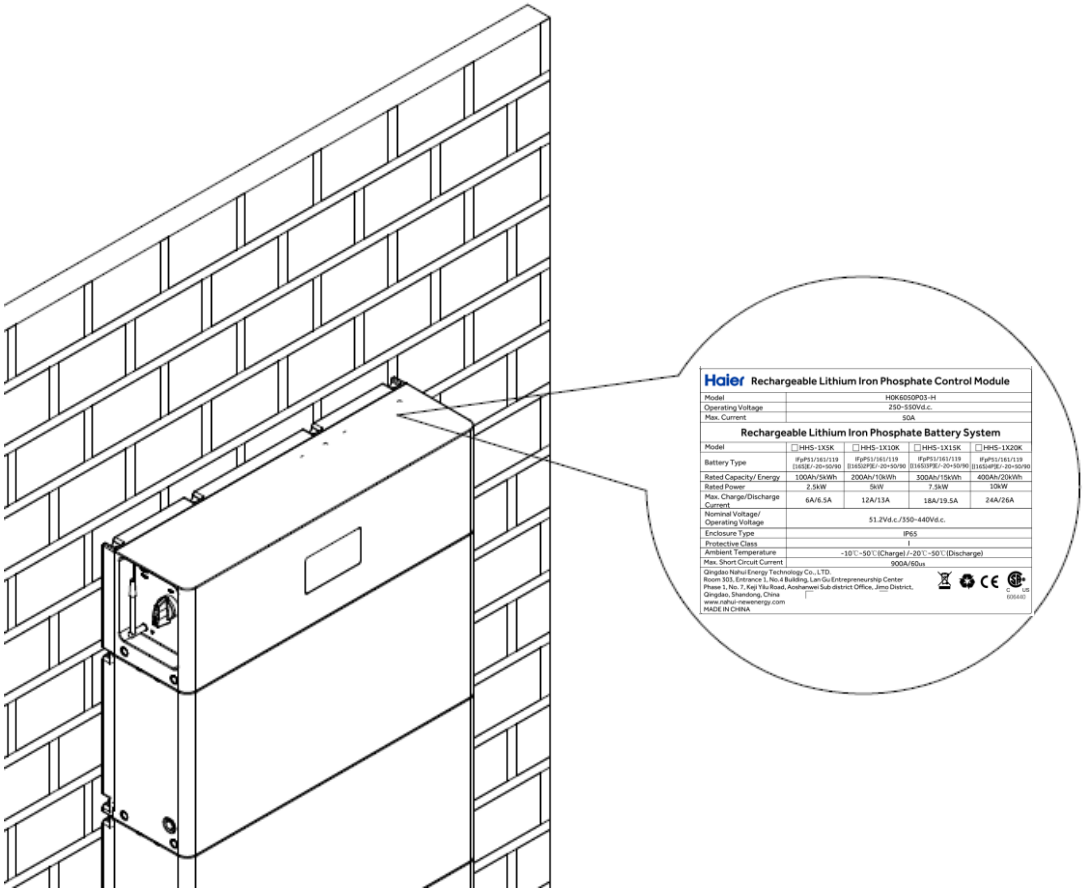

i. Installation accomplish

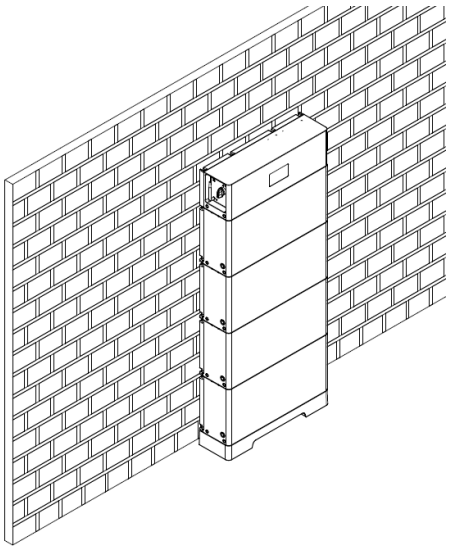

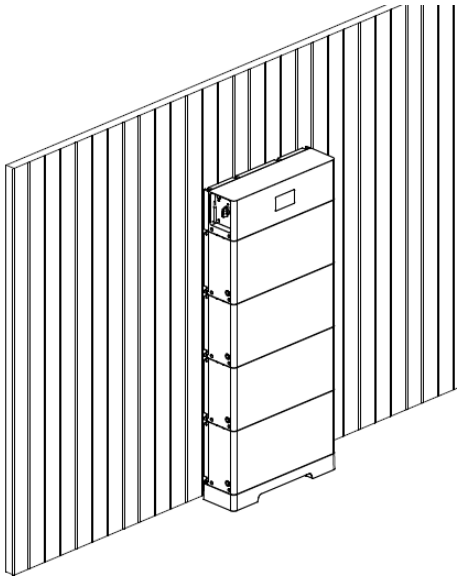

4 Electrical connections

Do not power on the system during electrical connection.

4.1 Grounding instructions

The recommended grounding cable specifications are as follows.

Ground cable	10AWG (yellow-green)
Ring terminal	M5
Screw	M5

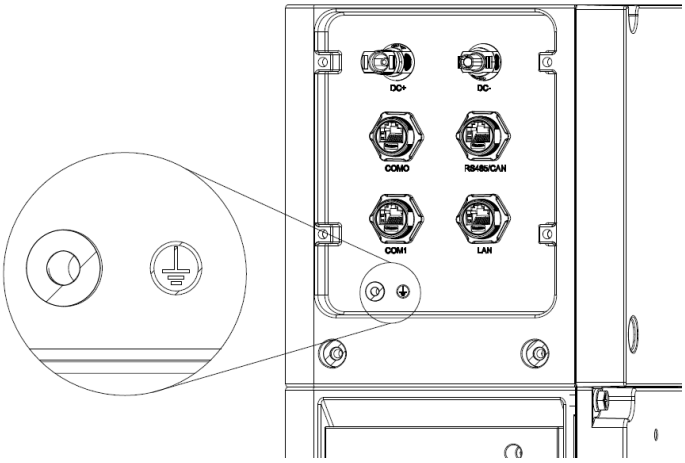

Figure 4-1-1 Schematic diagram of equipment grounding

4.2 Power connector installation

Connect the wired DC terminal to the control module as shown below, and push it until you hear a “Click” sound which proves the fastened connection.

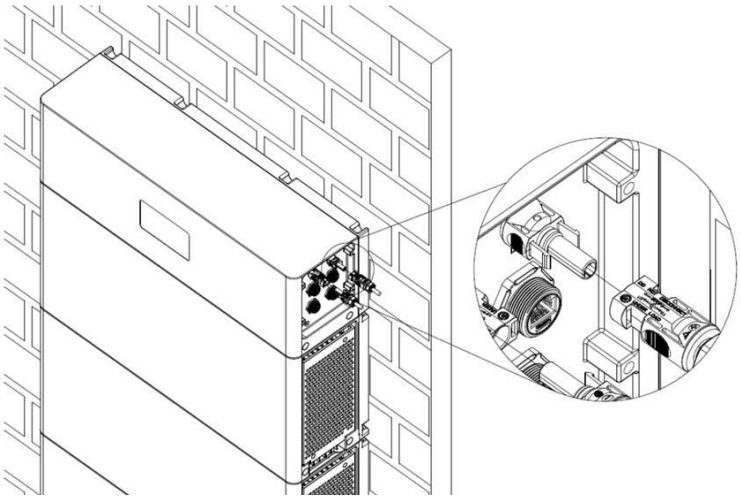

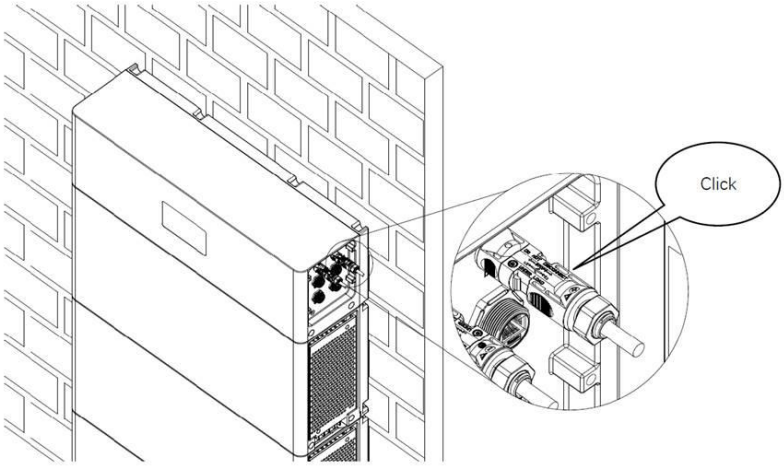

When pulling out the DC terminal, press the clips on both ends of the connector and then pull it out, as shown in the figure.

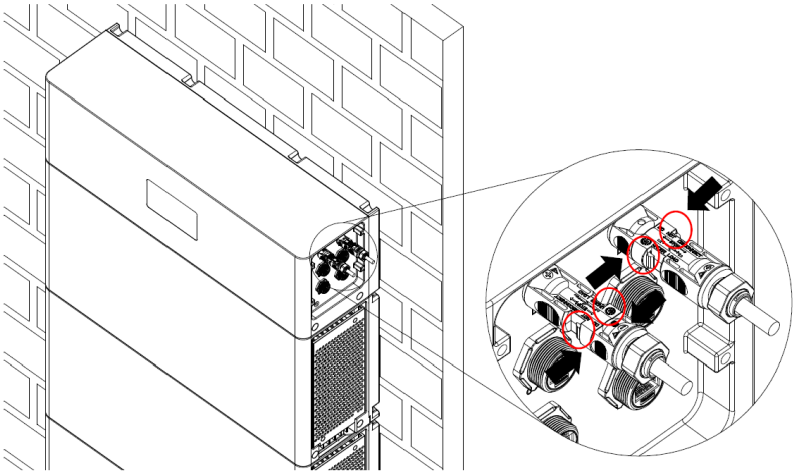

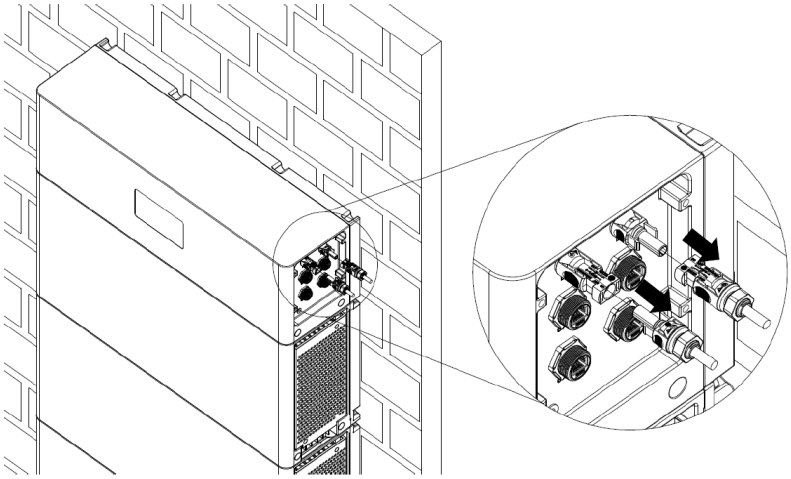

4.3 Cable connection

4.3.1 Single HHS-1X5K/10K/15K/20K system

Refer to user manual for inverter connection.

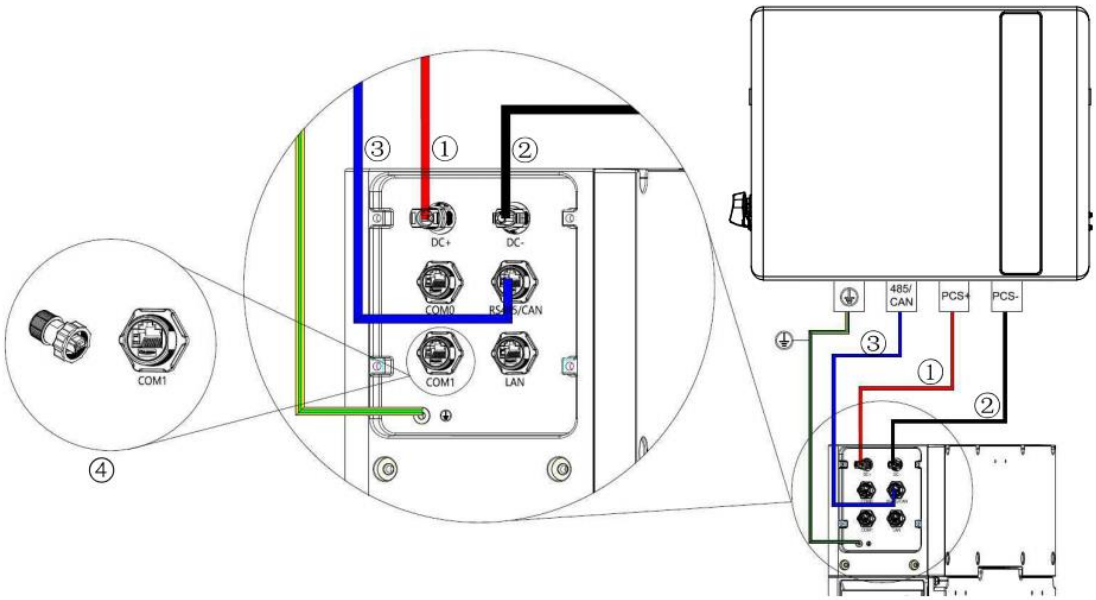

Figure 4-3-1 Wiring diagram of single machine system

No.	Harness name	Cable mark
①	Positive wire harness	DC+ PCS/BAT+
②	Negative wire harness	DC- PCS/BAT-
③	PCS-RS485/CAN communication cable	BAT PCS
④	120ohm resistance	/

120 ohm resistance shall be installed on COM1 port (To eliminate signal reflections in communication cables.)

RS485/CAN port pin definition of the control module:

Color	Port	Pin	Function
Orange-white	RJ45 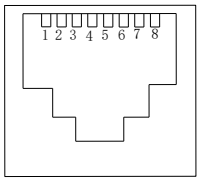	1	RS485A
Orange		2	RS485B
Green- white		3	NC
Blue		4	CANH
Blue- white		5	CANL
Green		6	NC
Brown-white		7	Wakeup+(5VDC)
Brown		8	Wakeup-

4.3.2 Multiple HHS-1X5K/10K/15K/20K in parallel

Up to 3 pcs HHS-1X5K/10K/15K/20K can be connected in parallel. The power conductor of the combined HHS-1X5K/10K/15K/20K output shall be according to the total current rated.

Consider using a distribution box when combining positive and negative output from multiple HHS-1X5K/10K/15K/20K as illustrated below. Choose proper conductor / cable in a way that the current during normal or fault condition (fault current) do not lead to excessive heating of the material or fire hazard.

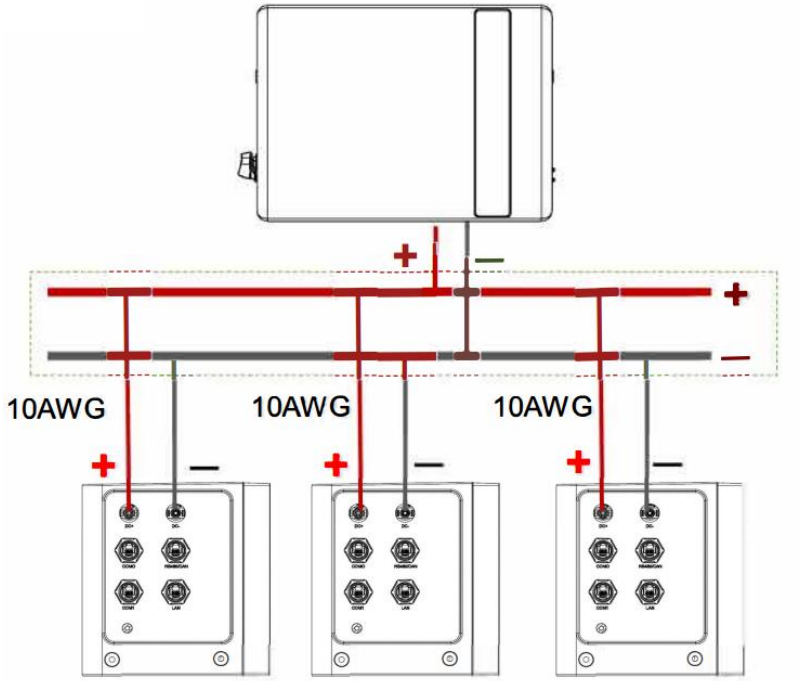

Figure 4-3-Za Power wiring diagram of parallel system

(Dashed square represents the DC combiner box, recommended for installers.)

For inverter communication, only the **CAN/RS485** on the mater unit needs to be connected. Communication between HHS-1X5K/10K/15K/20K is by connecting **COM0** (slave-side) to **COM1** (master-side) as illustrated below.

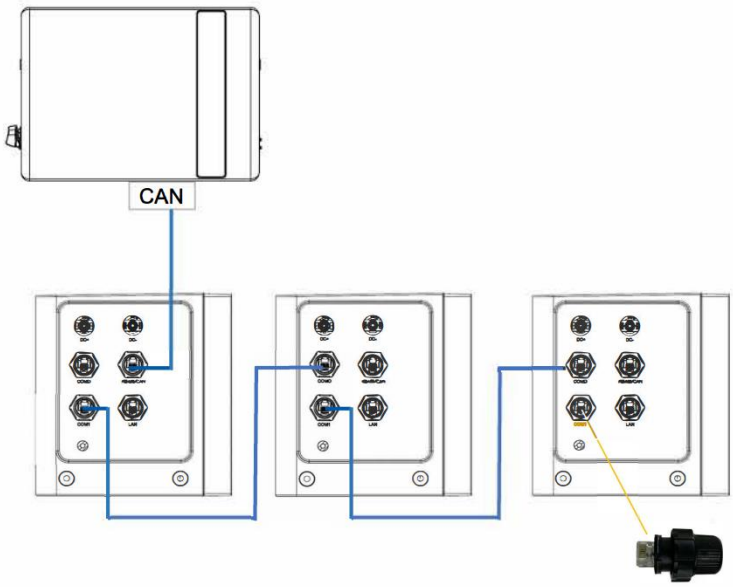

Figure 4-3-2b Communication wiring of multiple system

5 Power up your system

Checked all connections thoroughly before proceeding.

Refer to user manual for inverter operation.

5.1 System power up

- Close the inverter side switch ① (if the inverter has a separate battery switch).
- Close the control module circuit breaker ② (MCB).
- Press and hold the POWER button ③ for more than 3s.

The POWER button lights up, the output is enabled and the display interface lights up.

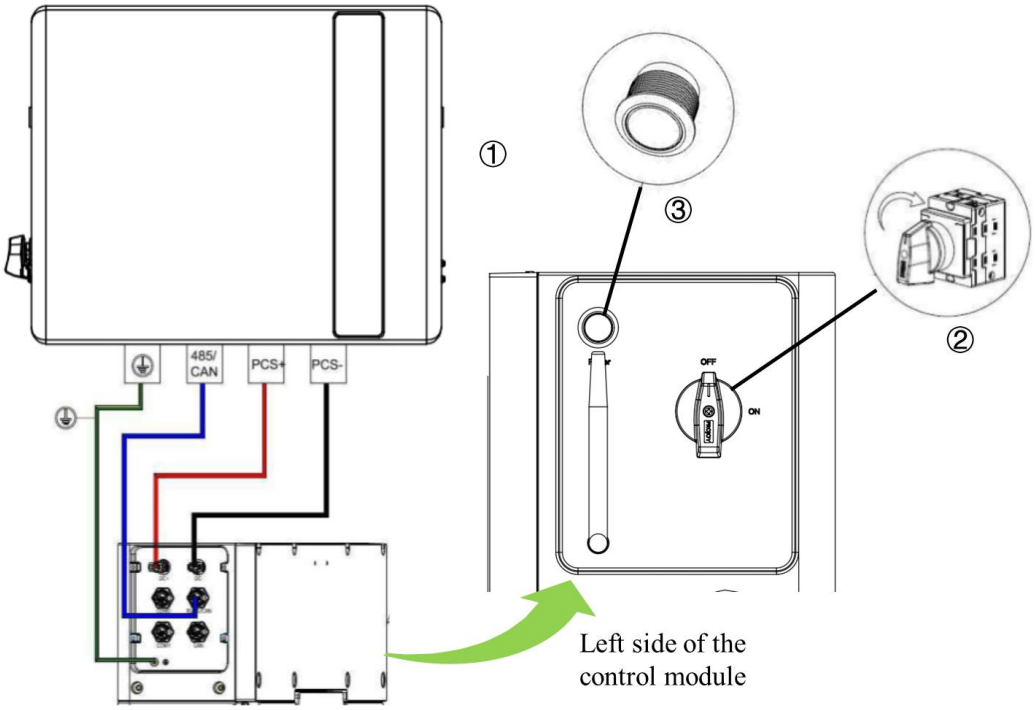

Note: Each cluster of battery systems in parallel system is powered on independently.

5.2 System power off

- Turn off the battery switch on the inverter side① (if any) or make the inverter stop charging and discharging the battery.
- Press and hold the POWER button ③ for more than 8s.
- Disconnect the battery side MCB ②.

The system disable output. Both Power button led and the display goes off.

Note: Each cluster of battery systems in parallel system is powered off independently.

5.3 Display description

- The display will automatically turn off after idling for 10 minutes.
  Short press the POWER button (1s) to wake up the display.

Table 5-3-1 Display

Item	Description	Function
①	SOC	Digital display of real-time state of charge (SOC)
②		[Constant on] discharging / idling, lit-up blue bar shows SOC. [Flashing] charging (last bar in counterclockwise direction)
③	System status	[Off] normal [Flashing] system fault
④	Heating state	[Constant on] heating function activated, [Off] heating function is not activated
⑤	Network status	[Constant on] Wi-Fi network connection successful [Flashing] Wi-Fi network is not connected
⑥	Battery module status	[constant on] battery module is normal [Flashing] battery module fault

5.4 System configuration

a. Download and install PowerLite APP

The battery parameter setting and remote monitoring can be realized through the APP software (PowerLite), please go to the App Store or Google Play to search for "PowerLite" to download and install.

b. Network configuration

1) Turn on the Wi-Fi and Bluetooth signal on your phone
2) Click Register to go to register an account

(Note: If you have already registered a login account, please ignore this step.)

① Enter the registration interface and fill in the information
② Receiving the verification by email, enter the verification code

③ Tap "register" to complete the registration

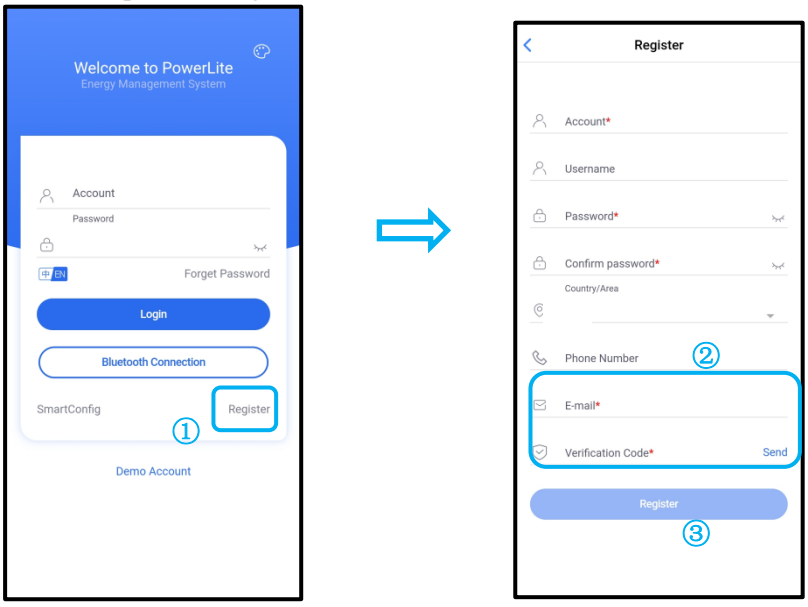

3) Configure the network

(You can check the Bluetooth SN code of battery system at the antenna position of control module)

① Click "SmartConfig"

② Select the Bluetooth device corresponding to the battery system

③ Enter the WiFi network account and WiFi password

④Click "SmartConfig" to complete the networking, the APP displays the successful network configuration information and the WiFi icon on the display is always on, that is, the network configuration is completed.

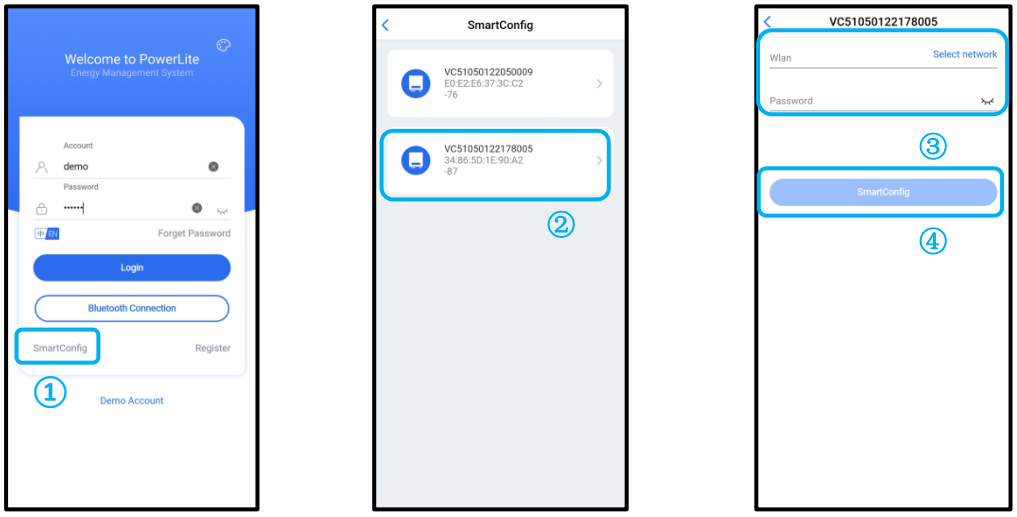

c. Add site/device

(Please check the battery equipment SN on the control module)

Enter the account, password and verification code

① Click "Login" to log in

② After logging in, click the top right corner icon of the main interface to add a site

③ After established the power station, then add equipment

④ Enter the SN code on the nameplate of the control module to add, then click "Assigned Plant" to bind the battery equipment to the established power station

⑤ Click "Done" to complete the site/device addition

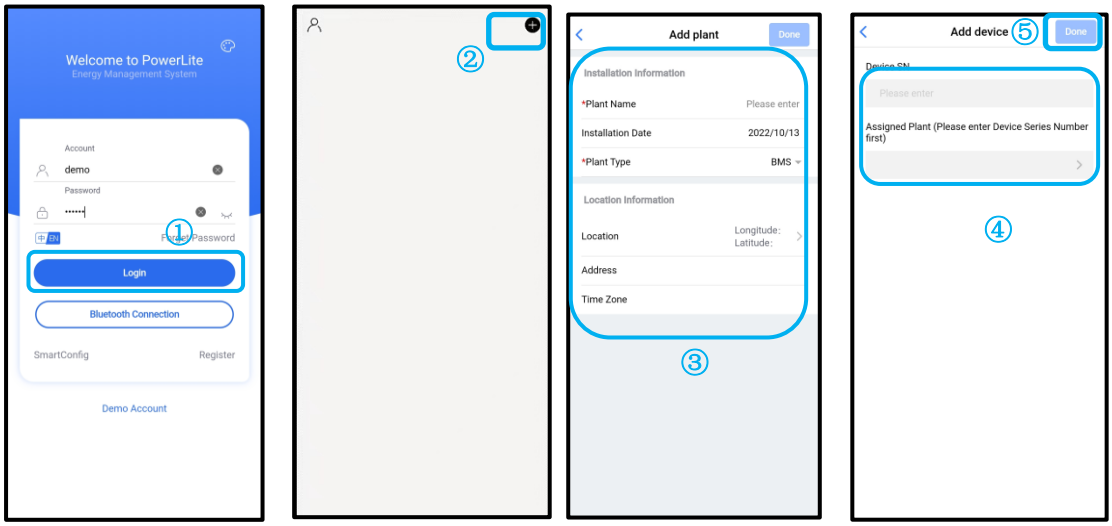

d. Select inverter manufacturer

(Note: HHS-1X(5/10/15/20)K can automatically adapt to the inverter , this step can be skipped.)

After the site/device is added successfully,

① Click to enter the corresponding site

② Click the SN code of device to enter the device system interface, and you can view the device data

③Click “Setting” to enter the inverter manufacturer interface for selecting the battery system configuration

④Select the inverter manufacturer, the system configuration is completed.

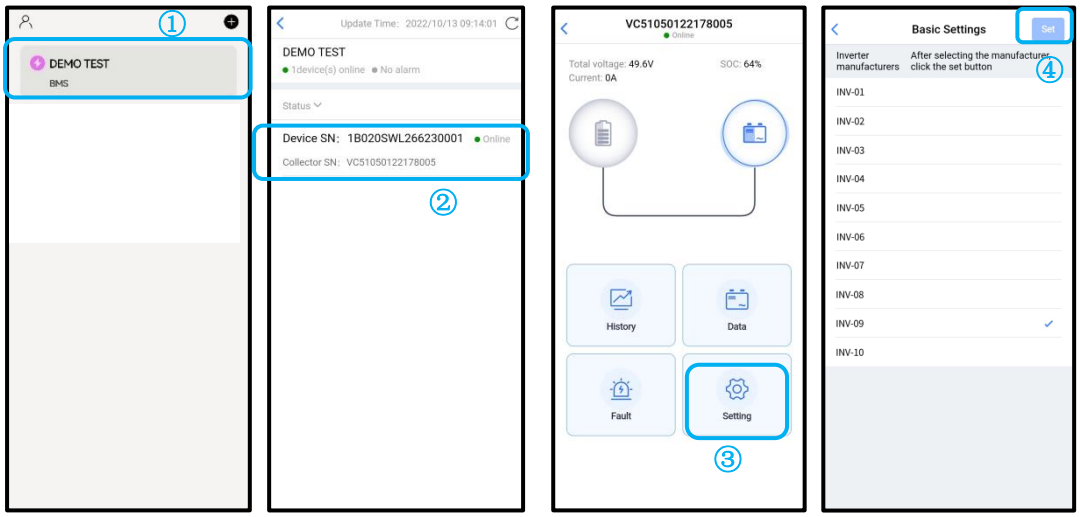

Please refer to the table below to set inverter manufacturer parameters.

Note: “Default” refers to using the HHS-1X(5/10/15/20)K standard CAN protocol.

Inverter manufactures	APP setting
Ferroamp ESO	INV-02
Goodwe ET	INV-03
Haier HV	**INV-07**
Default	INV-08

6 Maintenance and troubleshooting

6.1 Routine maintenance

- Maintenance charge every 6 months

From the date of manufacturer shipment, the battery shall be maintained every 6 months. Action must be taken in case SOC reaches 0%.

Ambient temperature	Must be recharged within
(45, 50] °C	7 days
(35, 45] °C	15 days
≤35°C	30 days

Users are recommended to charge the battery system through the inverter every 6 months without using the system.

- Disconnect the battery if not being used

  BMS consumes power even when the battery is not being used. Disconnect the battery output to prevent the battery from becoming empty. For store-away, make sure the SOC is between 45% and 55% before disconnect.
- Check the battery system regularly. Contact your support if any anomaly detected.
- The system will derate based on the temperature of the battery or inverter:

Battery performance (based on cell temperature)

When T > 45℃ or T≤10℃, the battery will reduce its charging or discharging power;

Charging

① When SOC≥80%, the voltage protection strategy will start to execute and the battery charging power will decrease;

②When -10℃ <T≤0℃, the battery cell need to be heated to more than 5℃ before charging;

③When T>45℃, the battery cell will reduce power due to overheating, with a maximum temperature of 54℃;

Discharge

①When T<0℃, the battery cell will reduce power due to low temperature, with a minimum temperature of -20℃;

②When T>45℃, the battery cell will reduce power due to overheating, with a maximum temperature of 58℃;

Inverter performance (based on the temperature of the inverter）

①When the inverter operates under off-grid state with rated power for a long time, the system may occur an overheating alarm. The system will derate or shut down for a while until the alarm removed.

②When the inverter operates with grid connected, under high ambient temperature or poor ventilation environment, the inverter will derate to ensure the system continuous operation.

6.2 Fault checklist

Fault	Cause	Solution
No voltage output when power on, without the POWER button light on	1. Press the POWER button for less than 3s 2. Battery module failure	1. Please try to restart the system. Press the POWER button for more than 3s. 2.Please contact the supplier for repair or replace the battery module.
No voltage output when power on, with the POWER button light on	1. The battery cannot be started due to external failure 2. Battery module failure 3. Control module fuse blown	1.Check the external wiring circuit, or disconnect the external wiring and try to restart again. 2. If it cannot be started after the external wiring is disconnected, check or replace the battery pack. 3. Check the connection of fuse in the control module. If not, please contact the professional engineer of manufacturer to deal with the problem.
Inverter won't start	1.The battery voltage is too low or the SOC is lower than the shutdown protection value 2.Battery module failure	1.Charge the battery after starting the inverter from the grid or PV. 2.Check the external wiring circuit, or disconnect the external wiring and try to power on again. 3.Please contact the supplier for more information.
Inverter CAN communication fails	1. Inverter manufacturer's parameter setting without setting in PowerLite APP; 2. Inverter/battery type selection error 3. Terminal resistance is not installed on COM1 port of control module 4. Inverter communication line pin connection error.	1.Log in to the PowerLite APP to reset PCS setting. 2.Select the corresponding battery type on the inverter. 3.COM1 install terminal resistor 4.Check the consistency of communication pin definitions between inverter and battery. 5.Please contact the supplier for more information.
Battery shutdown during charging and discharging	1. The battery is protected because of the excessive input/output power. 2. Battery module failure.	1.Reduce the input/output power of the battery system. 2.Please try to restart the battery system. 3.Log in to the PowerLite APP to view the fault information and contact the supplier
Battery module overcurrent protection	The battery is protected because of the excessive input/output power.	1. Reduce the input/output power of the system. 2. Overcurrent fault can be recovered automatically. If the fault is triggered three times in succession, it will be locked and the system needs to be restarted 3.Log in to the PowerLite APP to view the fault information and contact the supplier
Battery module charging and discharging over-temperature protection	1. The installation environment is too hot. 2. The product has been running at rated power for too long. 3. The internal fan of the battery module works abnormally.	1. Check the ambient temperature and the ventilation of battery system. If the ventilation is not well or the ambient temperature is too high, please improve the ventilation and heat dissipation 2. Reduce the load power of the inverter 3. Please contact the supplier for more information to replace the

		fan
Battery module charging low temperature protection	1. The product installation environment is too cold. 2. The heating film of the battery module works abnormally.	1. Check the ambient temperature of battery system. If the ambient temperature is too low, please improve the environment 2.Please contact the supplier for more information
Automatic shutdown at low battery voltage	The battery is over-discharged and not recharged in time	1. The inverter is set with charging mode, which can charge the battery through the grid or PV 2. Restart the battery and charge it through the inverter 3.Please contact the supplier for more information
Battery module failure	Internal failure of battery module	Log in to the PowerLite APP to view the fault information and contact the supplier
Short discharge time	battery SOC is low	Keep the product charged continuously and keep the energy storage battery system fully charged
	low ambient temperature	Guarantee the product to work within the recommended suitable temperature range
	Product overload	Check load status and remove non-essential loads
	Batteries age and capacity decreases	To replace the battery, please contact the supplier for the battery and its components
Unable to charge and discharge	Internal failure	Log in to the PowerLite APP to view the fault information and contact the supplier
	Battery report charging or discharging protection failure	Log in to the PowerLite APP to view the fault information and contact the supplier
	After the battery is discharged to the SOC protection value, it needs to be charged for a period of time before it is allowed to discharge.	The battery is charged to the SOC value set by the restart
	Battery over temperature	Stand at room temperature for more than 3 hours
After the system is powered on, the display cannot be lit or the displayed content is abnormal	1.Display failure 2.Control module fault	1.Please try to restart the battery system. 2.Log in to the PowerLite APP to view the fault information and contact the supplier 3.Please contact the supplier to repair or replace the control module
The display cannot wake up or light up during system operation	1. If the POWER button light is off, the POWER button is faulty or the button wiring is loose 2. The display still does not light up after restart, the display is faulty	1. Log in to the PowerLite APP to view the fault information 2. Please try restarting the battery 3.Please contact the supplier to repair or replace the control module
The number of battery icons displayed on the display screen is inconsistent with the actual number	Communication disconnection	1.Check whether the battery stack is installed reliably, and confirm the abnormal battery through the battery status indicator on the display 2. Please try restarting the battery 3.Please contact the supplier to repair or replace the battery module
The system status light on the display is abnormal and blinks	Battery module failure	Log in to the PowerLite APP to view the fault information and

every 1S		contact the supplier
The heater works abnormally, and the heating status indicator on the display flashes every 1S	Heating circuit failure	Log in to the PowerLite APP to view the fault information and contact the supplier
Abnormal Bluetooth connection	1.bluetooth account connect error 2. Bluetooth connected to other devices	1.Check whether the paired Bluetooth is consistent with the installed product 2. Disconnect Bluetooth from other devices
Abnormal WiFi connection	1. The WiFi connection is misconfigured 2. The WiFi module is abnormal and the line connection is abnormal	1. Check if the battery WiFi connection configuration is correct 2. Check whether the antenna is installed or connected reliably

7 Warehouse storage guidelines

7.1 Packaging guidelines

Lithium-ion batteries is recognized as dangerous goods. The packaging requirements for battery products are as follows:

a. The packaging manufacturer with the packaging qualification for dangerous goods is responsible for providing product packaging, and the packaging manufacturer has a record in the local Commodity Inspection Bureau;

b. After the packaging manufacturer completes the packaging, the supplier needs to apply to the Commodity Inspection Bureau, and the Commodity Inspection Bureau will provide the "Dangerous Package Product Use Inspection Sheet" and

c. "Dangerous package product performance inspection sheet", and complete the dangerous package commodity inspection;

d. All battery packs should be packaged with product instruction manuals. The packaged product should be placed in a dry, dust-proof and moisture-proof packing box;

e. The product name, model, quantity, gross weight, manufacturer, and ex-factory date should be marked on the outside of the packing box.

f. The necessary signs such as "upward" and "fear of fire" shall meet the requirements of GB/T 191;

g. The packing method is: packing in a carton with molded foam buffer material in the carton;

h. Accessories packaging: single accessories are first fastened with cardboard or plastic film or braided straps, neatly placed in the carton, and filled with regular fillers (foam pads, cardboard, etc.) to prevent the accessories from shifting in the box. The following documents should be included with the product when leaving the factory:

   1) Product certificate (both in Chinese and English);
   2) Product use (installation) manual (both in Chinese and English);
   3) Product packing list (both in Chinese and English);
   4) Factory inspection report (both in Chinese and English).

i. Clean battery

Regular cleaning of the battery system is recommended. If the case is dirty, use a soft dry brush or dust collector to remove the dust. Corrosive liquids should not be used to clean the housing. Cleaning liquid materials include solvents, abrasives, etc.

j. Packaging step

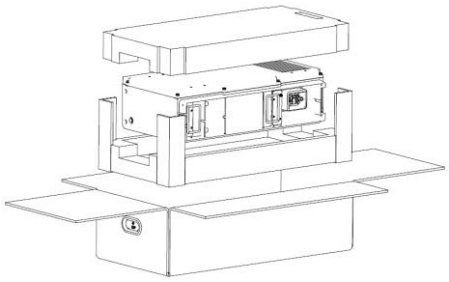 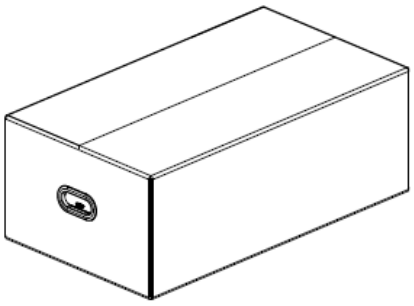 Battery pack	
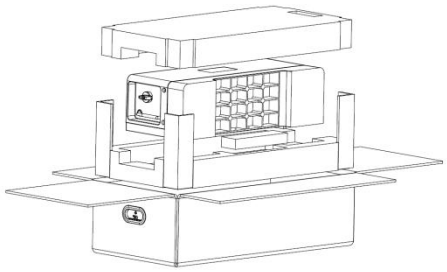 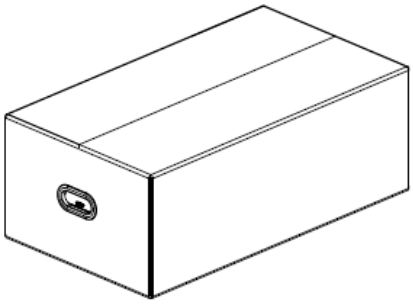 Control module	

7.2 Storage

The battery pack is stored in a clean, dry and ventilated room with an ambient temperature of 25°C±5°C and a relative humidity of not more than 75%. The battery pack has a state of charge of 45% to 55%. Avoid contact with corrosive substances and keep away from fire and heat sources.

8 Dispose of used batteries

Comply with applicable local regulations for the disposal of electronic waste and used batteries.

- Do not mix with your household waste.
- Do expose the battery to high temperatures or direct sunlight.
- Do not expose batteries to high humidity or corrosive environments.
- Do not crush or pierce batteries

Contact supplier or original manufacturer for disposal options.

9 Detailed specifications

Item	Parameter			
Control module model	H0K6050P03-H			
Operating voltage	250~550Vdc			
Max. current	50A			
Battery module model	B40012DP03-H			
Cell Type	LFP			
Rated Voltage	400V, with DC-DC power module built-in			
Rated energy	5kWh			
Group method	16S1P			
System model	HHS-1X5K	HHS-1X10K	HHS-1X15K	HHS-1X20K
No. of batt. module	1	2	3	4
Rated energy	5kWh	10kWh	15kWh	20kWh
Rated power	2.5kW	5kW	7.5kW	10kW
Max. charge current	6A	12A	18A	24A
Max. discharge current	6.5A	13A	19.5A	26A
Dimensions W*H*D, mm	653*597*189	653*912*189	653*1227*189	653*1542*189
Net weight	67kg	119kg	171kg	223kg
Rated voltage	400V			
Operating voltage	350V~450V			
External communication	CAN/RS485/WiFi/LAN/Bluetooth			
WiFi Frequency range	2412-2472MHz			
WiFi Max. Transmission power range	＜20dBi			
Bluetooth Frequency range	2402-2480MHz			
Bluetooth Max. Transmission power range	＜8dBi			
Warranty	10 years (details in warranty agreement)			
Cycle life	6000 times (25°C, 0.5C/0.5C, 90%DOD）			
Scalable	Up to 3 cabinets in parallel			
Protection class	IP65			

Operating temperature	Charging [-10,50] °C; Discharging [-20,50] °C
Working humidity/ altitude	10%~95%RH/<4000m
Certification	IEC62619,CE,UN38.3,VDE2510-50

10 RED Declaration of Conformity (DoC)

RED Declaration of Conformity (DoC)

Unique identification of this DoC: …….

We,

Qingdao Nahui Energy Technology Co., Ltd.
Room303, Entrance 1, No.4 Building, Lan Gu Entrepreneurship Center Phase I, No. 7, Keji Yilu Road, Aoshanwei Sub district Office Jimo District, 266200 Qingdao, Shandong, PEOPLE'S REPUBLIC OF CHINA

.....

Declare under our sole responsibility that the product:

Product name: Rechargeable Lithium Iron Phosphate Battery System
Trade name:
Type or model: HHS-1X5K, HHS-1X10K, HHS-1X15K, HHS-1X20K
relevant supplementary information: .....
(e.g. lot, batch or serial number, sources and numbers of items)

to which this declaration relates is in conformity with the essential requirements and
other relevant requirements of the RED Directive (2014/53/EU).
The product is in conformity with the following standards and/or other normative
documents:

HEALTH & SAFETY (Art. 3(1)(a)): EN IEC 62619:2022, EN 62311:2008, EN IEC 62311:2020, EN 50665:2017
EMC (Art. 3(1)(b)): EN IEC 61000-6-1:2019, EN IEC 61000-6-3:2021, EN 301 489-1 V2.2.3:2019, EN 301 489-17 V3.2.4:2020
SPECTRUM (Art. 3(2)): EN 300 328 V2.2.2:2019
OTHER (incl. Art. 3(3) and voluntary specs): N/A
Accessories: N/A
Software: N/A
Technical file held by: Qingdao Nahui Energy Technology Co., Ltd.
Place and date of issue (of this DoC):.6.1.2023.....
Signed by or for the manufacturer: ....
(Signature of authorised person)

Name (in print): Yu Jian..... .....
Title: .....Engineer.....

Qingdao Nahui Energy Technology Co., LTD.
Address: Room 102-3, Building E2, No. 289 Laiqing Road, Wenquan Street Office, Jimo District, Qingdao City, Shandong Province, PEOPLE'S REPUBLIC OF CHINA

Copyright Declaration
All rights to the content of this manual are owned by Qingdao Nahui Energy Technology Co., Ltd. (hereinafter called as 'Nahui Energy'). Any corporation or individual should not plagiarize, partially or fully copy it, and reproduce or distribute of it in any form or means without prior written permission from Nahui Energy. Nahui Energy reserves the right of final interpretation.
This manual may be updated according to user's or customer's feedback. The information in this manual is subject to change without notice. Please check our website at https://www.nahui-newenergy.com for latest version.

Please adhere to the actual products in case of any discrepancies in this user manual. If you encounter any problem on the product, please find out the S/N and contact us, we will try to respond to your question ASAP.